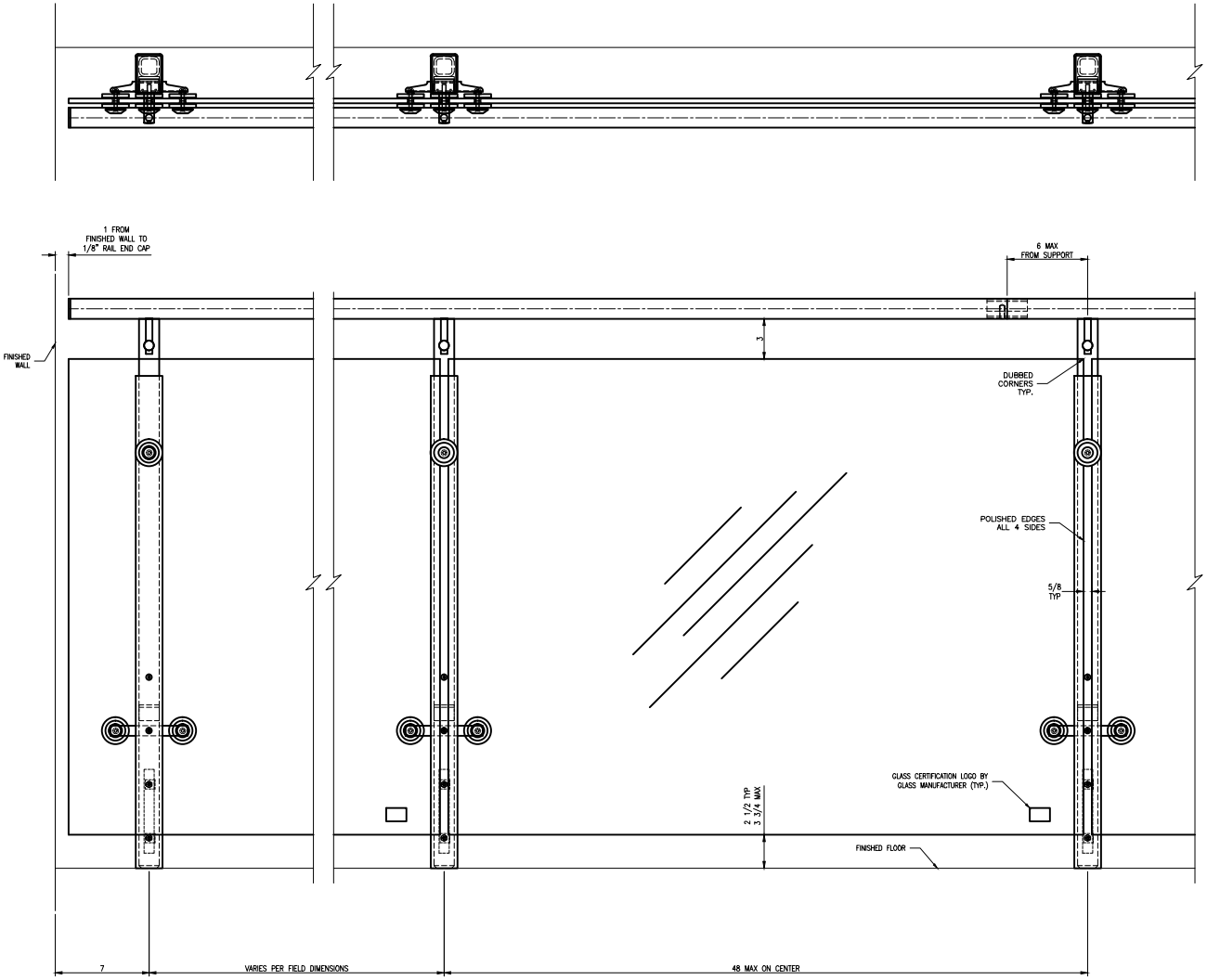

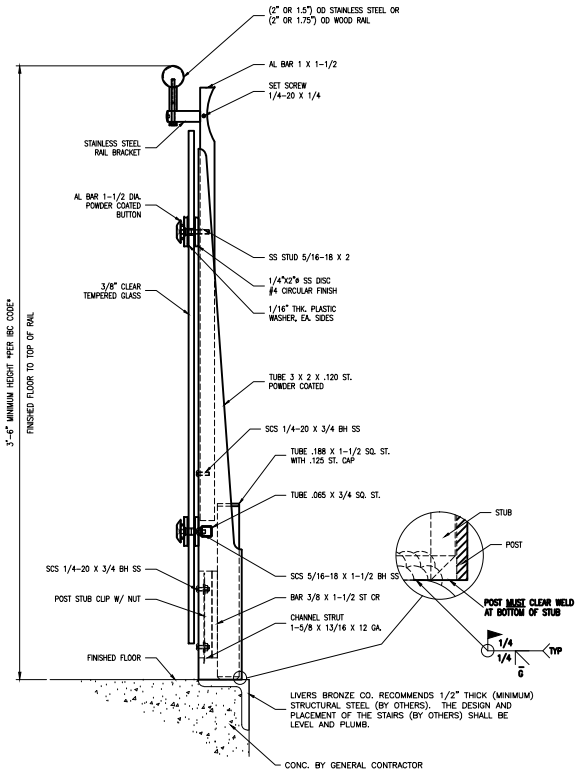

LIVERS BRONZE
4623 East 75th Terrace Kansas City, MO 64132
Phone (816) 300-2828 / Fax (816) 300-0864
www.liversbronze.com
livers@liversbronze.com

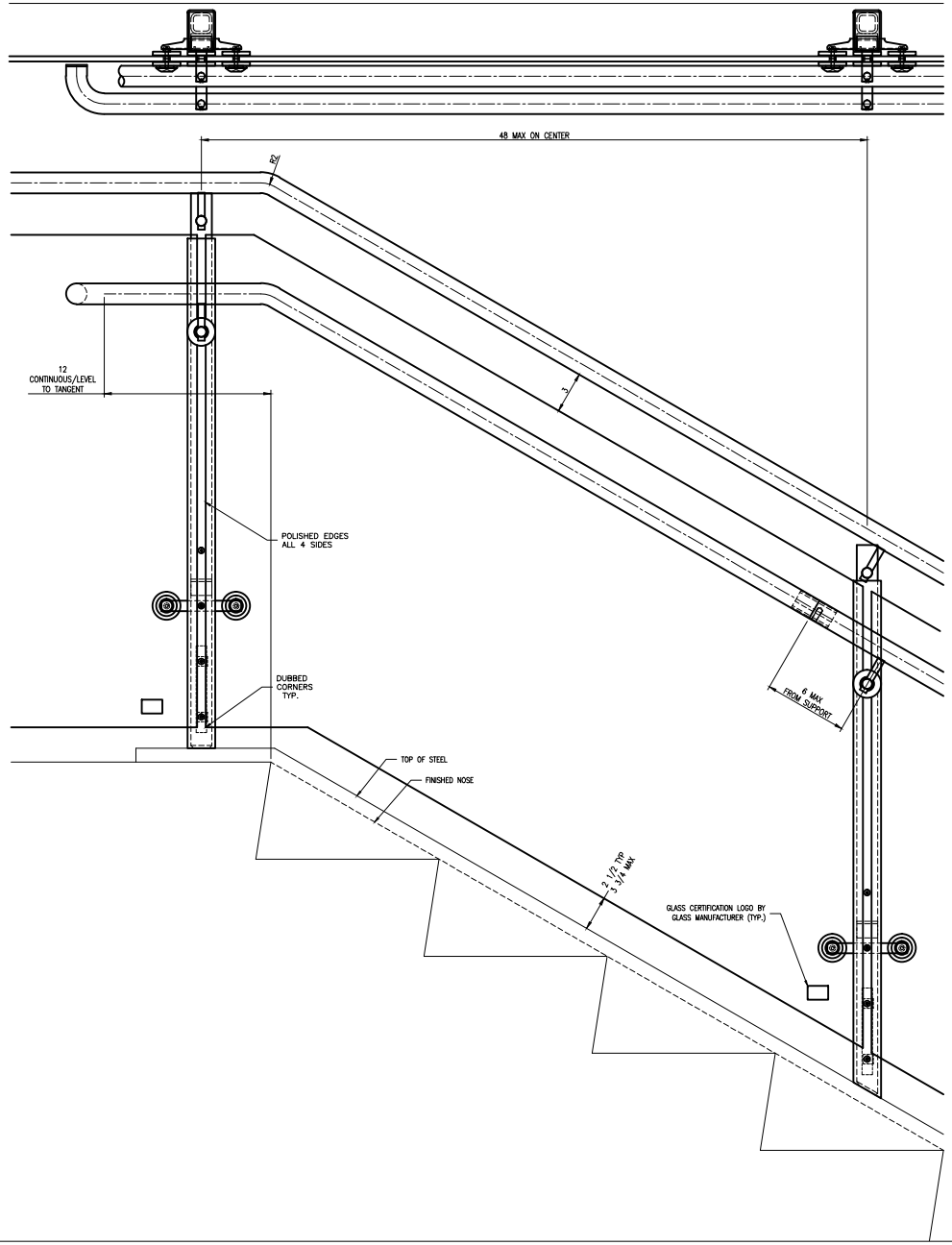

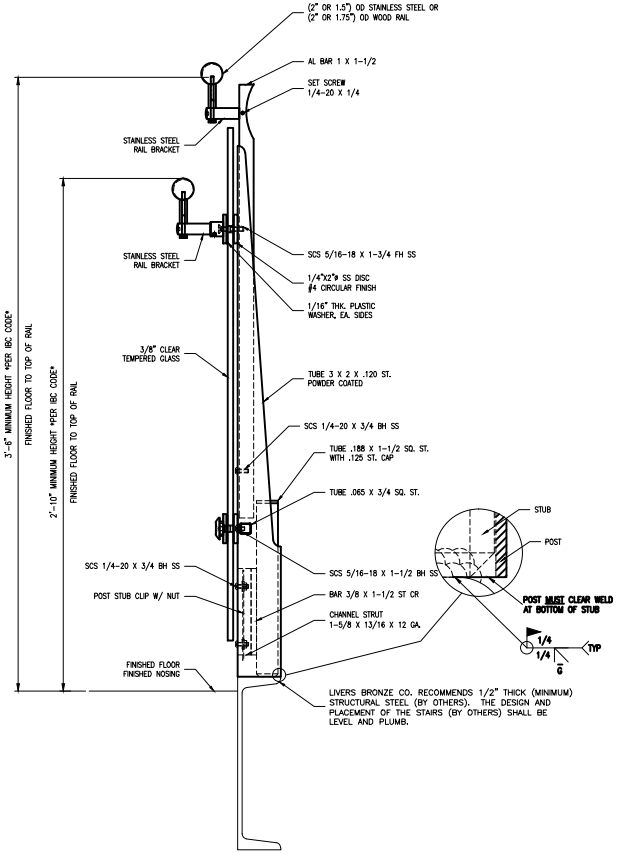

LIVERS BRONZE
4521 East 75th Terrace Kansas City, MO 64132
Phone (816) 330-2626 / Fax (816) 303-0864
www.liversbronze.com
livers@liversbronze.com

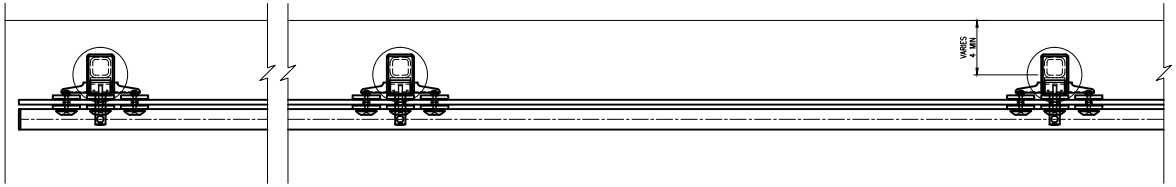

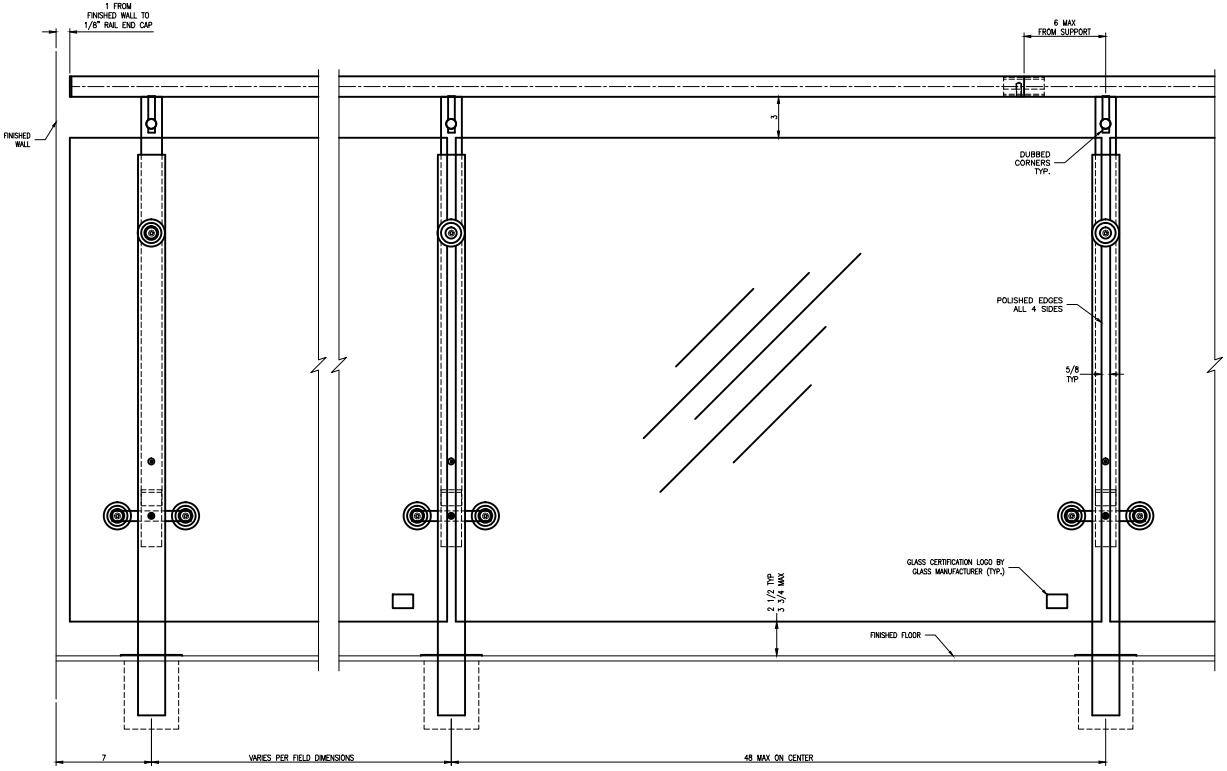

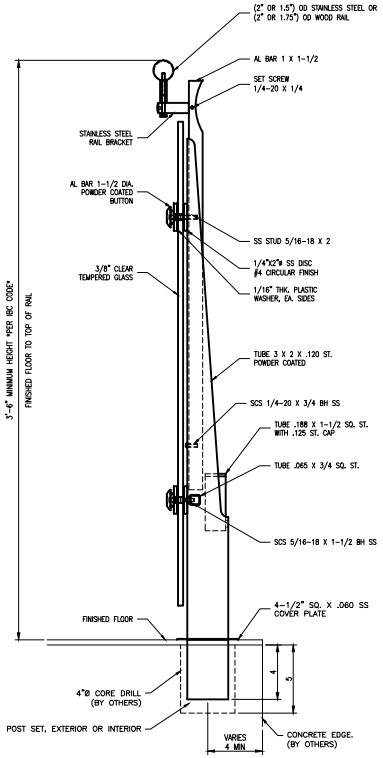

LIVERS BRONZE
4621 East 75th Terrace Kansas City, MO 64132
Phone (816) 200-3928 / Fax (816) 300-6864
www.liversbronze.com
liverz@liversbronze.com

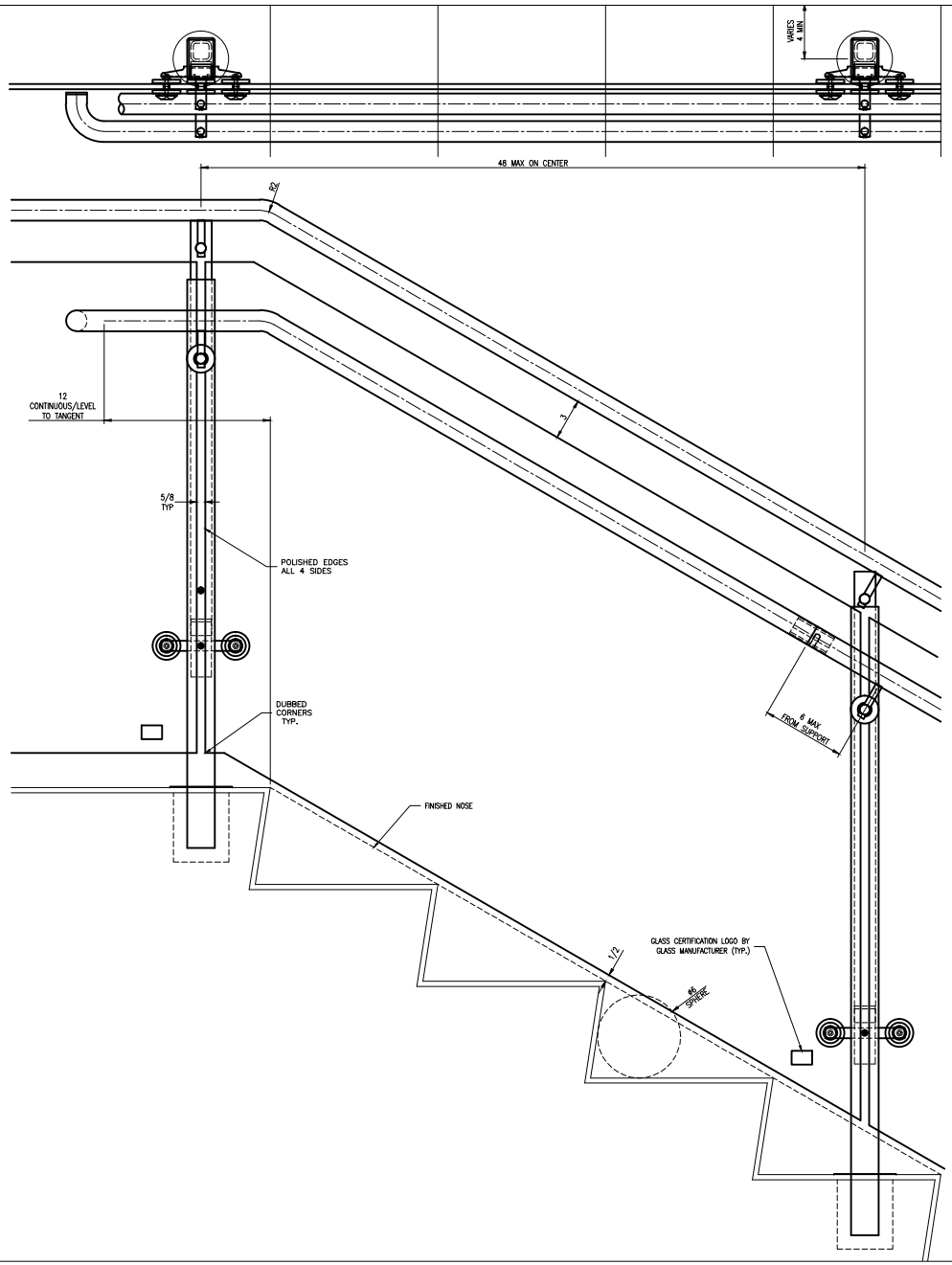

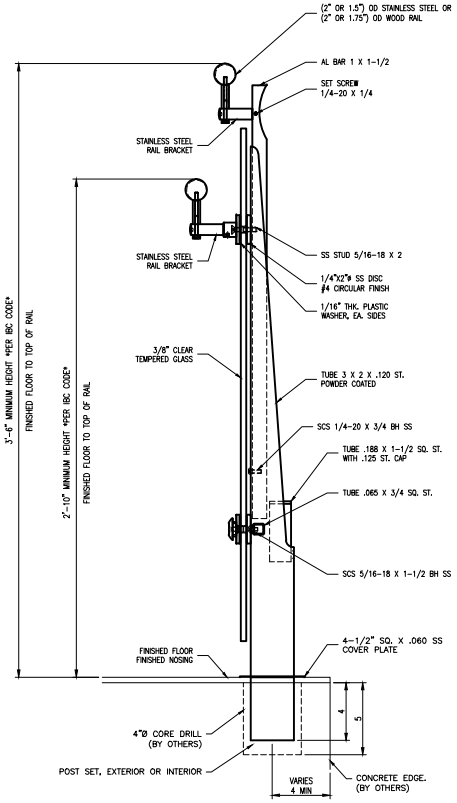

LIVERS BRONZE
4621 East 75th Terrace Kansas City, MO 64132
Phone (816) 300-2828 / Fax (816) 300-0864
www.liversbronze.com
livers@liversbronze.com

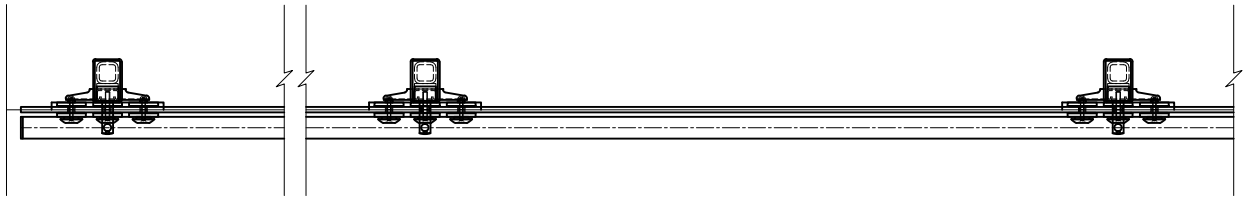

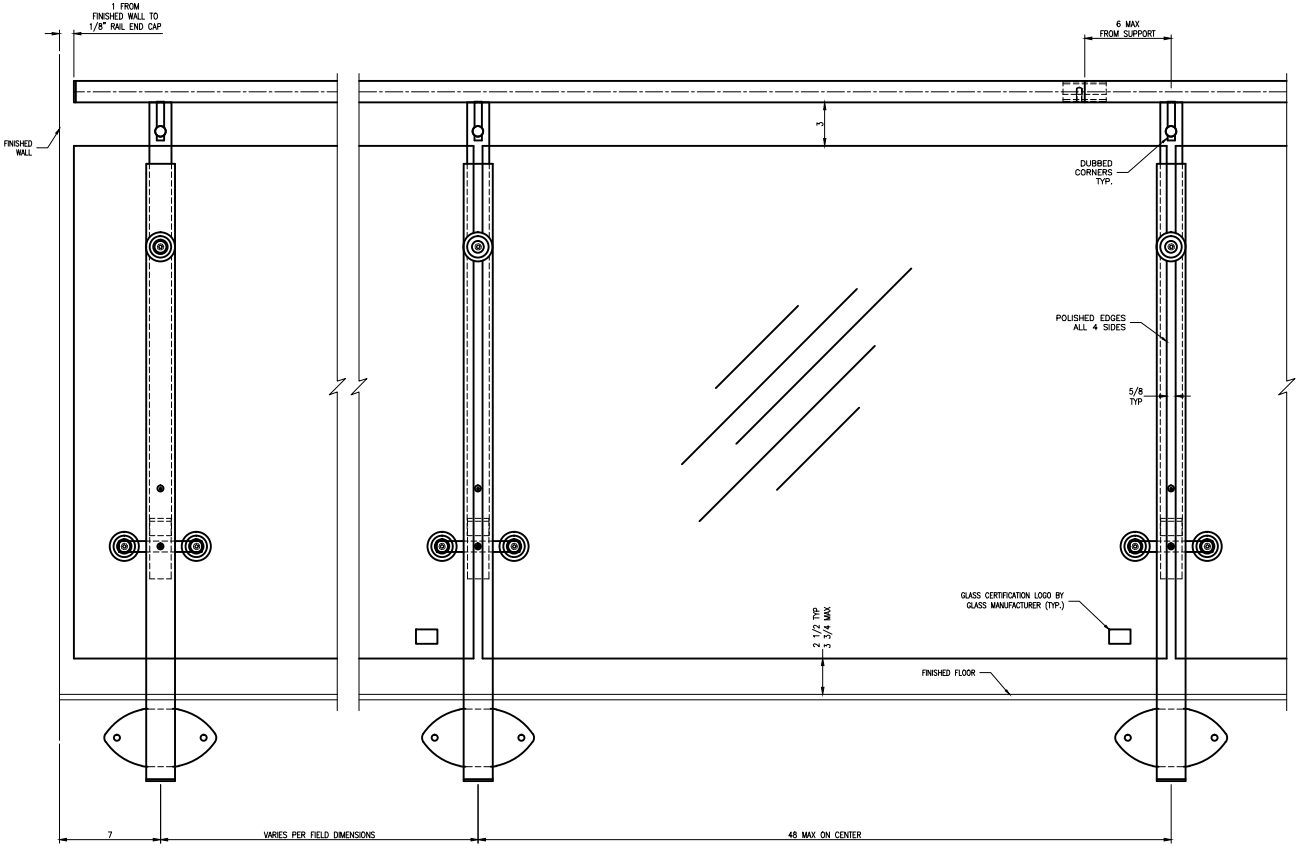

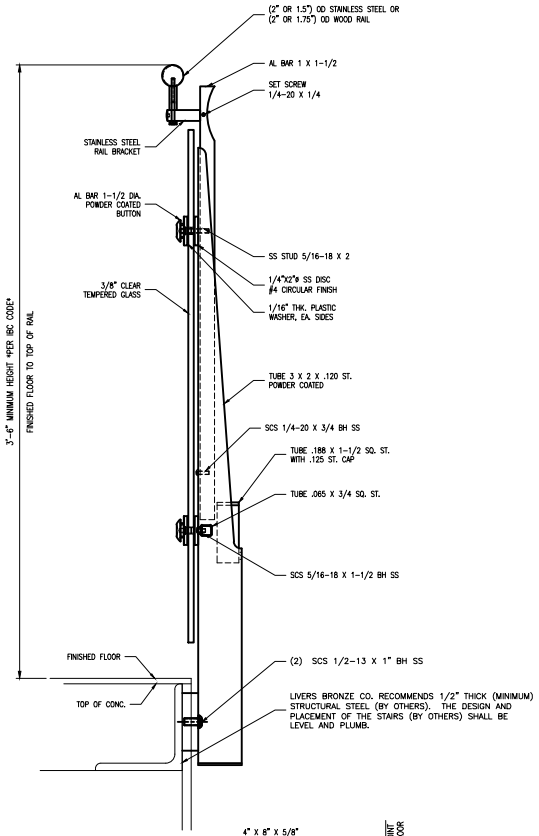

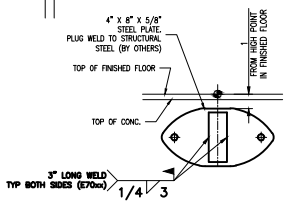

VIEW FROM NON-TRAFFIC SIDE

LIVERS BRONZE
4625 East 75th Terrace Kansas City, MO 64132
Phone (816) 300-2828 / Fax (816) 300-0864
www.liversbronze.com
livers@liversbronze.com

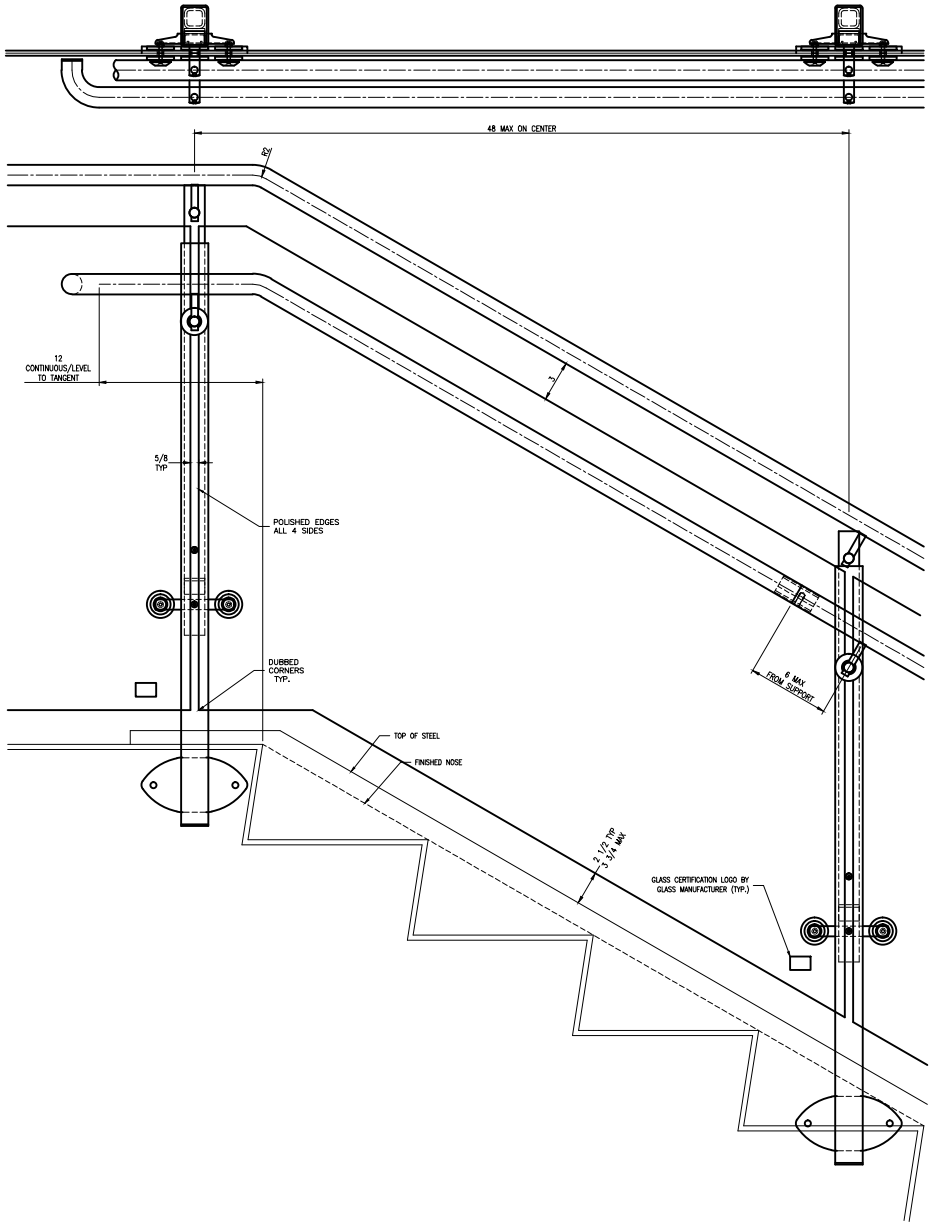

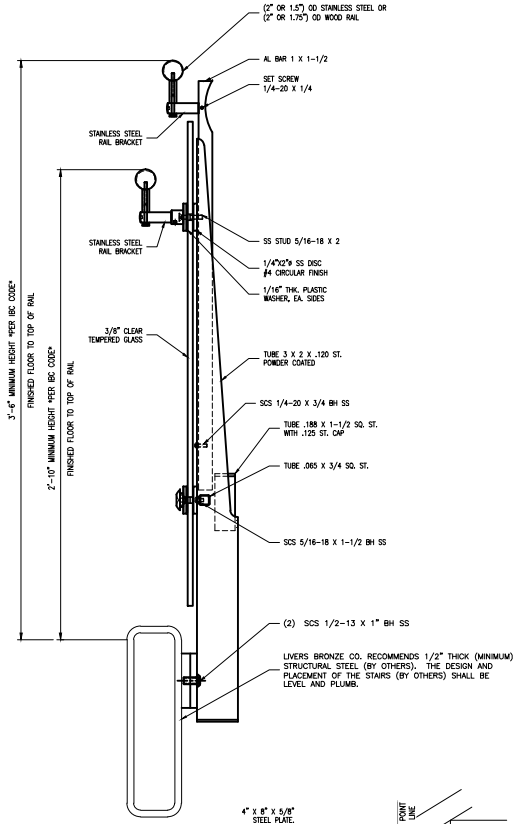

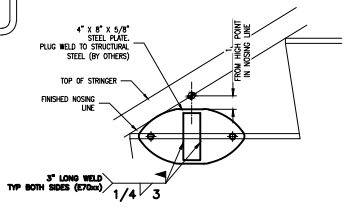

VIEW FROM NON-TRAFFIC SIDE

LIVERS BRONZE
4923 Bank Rd. Trenton Kansas (33) 305 8632
Phone (816) 296-3181 Fax (816) 296-3184
www.liversbronze.com
livers@liversbronze.com